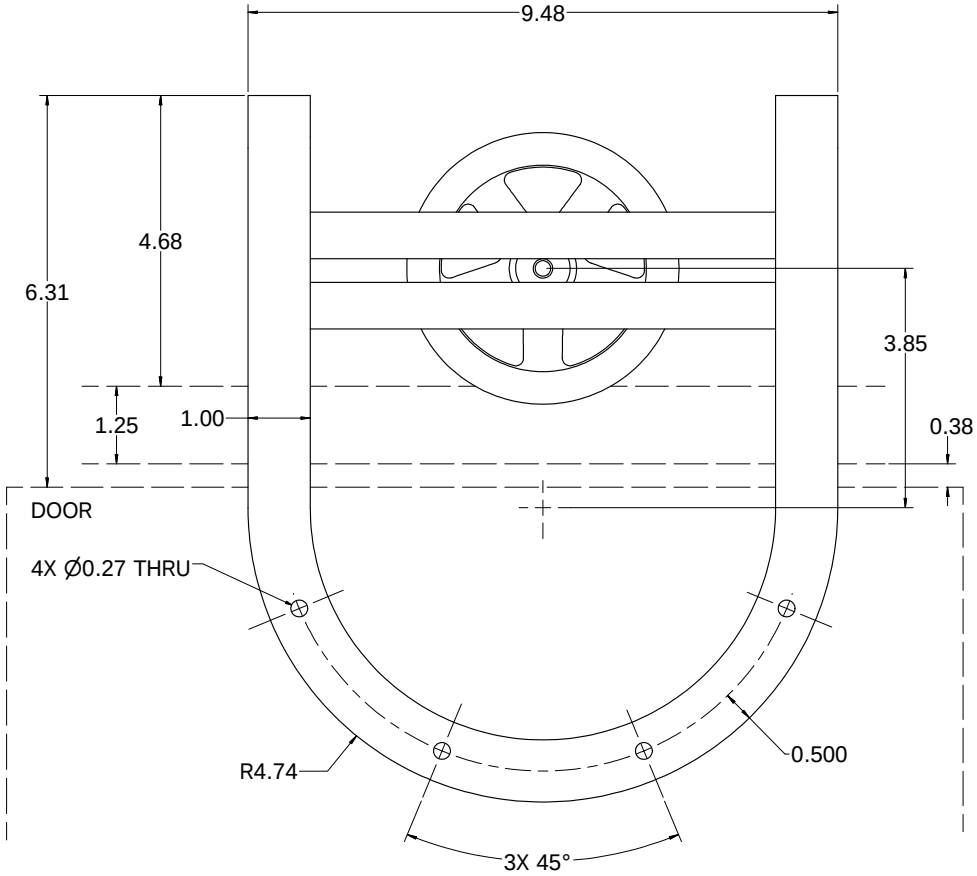

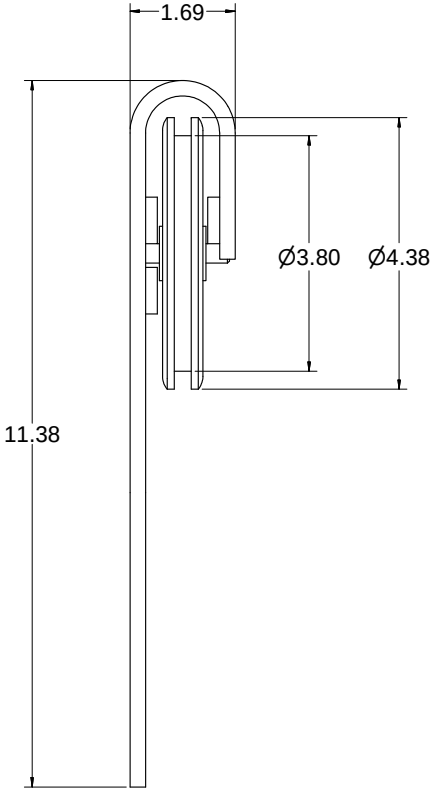

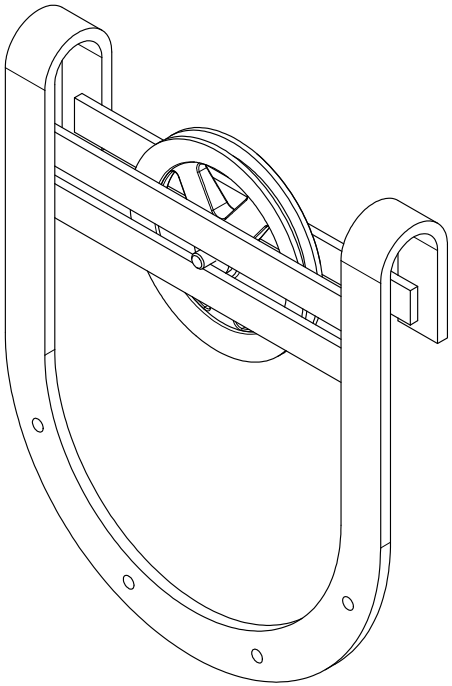

NOTE: QTY 2

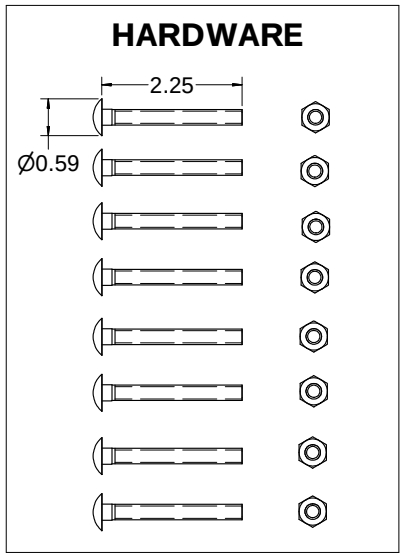

3002
MEDIUM HANGERS